Scope Wonder

This is simply a great performing wall washer. With a 3” aperture sitting completely recessed, this fixture pushes the light all the way to the top of the wall. Providing a 2:1 vertical illumination ratio from top to bottom on a 10’ wall, we challenge you to find anything better. The Scope W 3” wall wash is part of larger Scope Wonder downlight collection providing an incredibly wide selection of finishes, mounting options, sources and technology including the release of our INK tunable white source in 2 dynamic ranges.

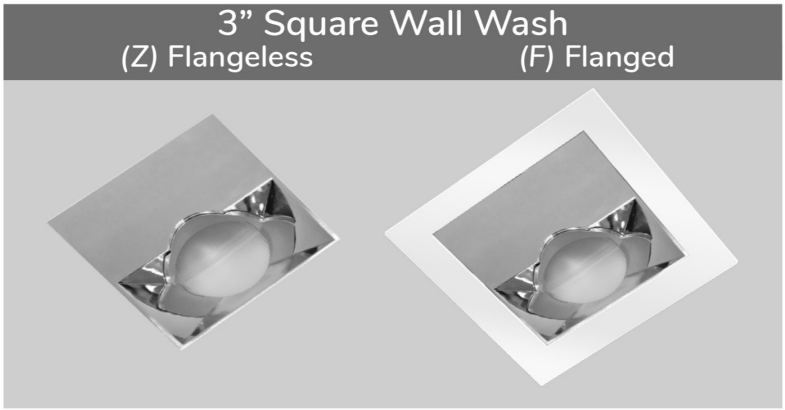

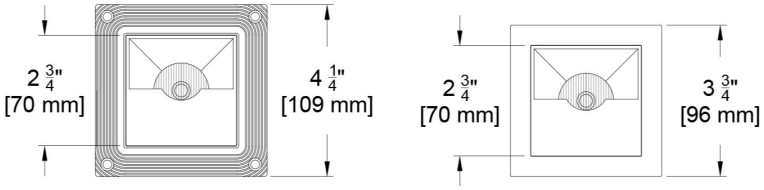

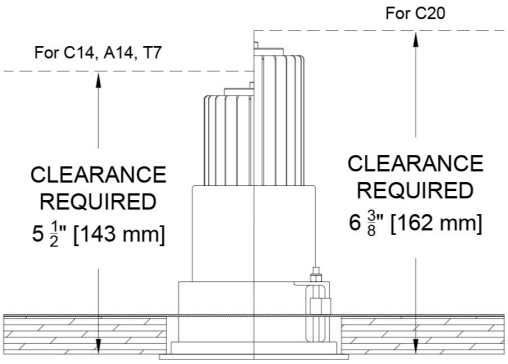

Square Standard Size (F)

SQUARE Wall Wash				
Source	System watts (W)	Delivered Lumens (lm)	Lumens/ Watt	Peak cd
Citizen C14	14	642	46	1051
Citizen C20	21	934	44	1548
Ambient Dim A14	15	469	32	769
Tunable White 1840	10	329	32	532
Tunable White 2765	10	435	43	677

Citizen and Ambient Dim data based on measurements at 3000k.
Tunable white data at midpoint CCT of color range.

PROJECT: TYPE:

SPECIFIER: DATE:

Key Points (SCW3WW-S)

Trim

- Machined aluminum Body in USA
- 40 flange color options + custom RAL
- Flange or flangeless

Source / Optics

- Tunable White with 2 available ranges (1800 to 4000k and 2700 to 6500k)
- Achieves 2:1 vertical illumination ratio from top to bottom of wall with 2.5' setback and 2.5' on-center spacing
- Up to 934 delivered lumens
- <2 MacAdams Ellipses (<2 SDCM)
- 90+ CRI, 60+ R9 Standard, 95+ CRI, 90+ R9 available with Ambient Dim option
- 2700, 3000, 3500, 4000K, Ambient Dim (3000 to 1900k)
- TITLE 24 C14 and T7 2765 Sources meet California Title 24 Requirements to JA8
- Lifetime: L87B3>55,000 hours at 40ºC Ambient (Fixed White)

Housing

- Remodel or millwork option available
- TITLE 24 IC Rated / airtight housing approved for use in direct contact with insulation, Chicago Plenum Available and meets CA Title 24
- 2 pan options IC rated for use in direct contact with insulation (not for spray foam)

Driver And Control

- Drivers are integral with fixtures unless noted as remote mount with * in ordering code options. "K can" type drivers do not fit through the 3" hole
- TruPhase™, 0-10, DALI, Ecosystem or Wireless Control
- Flicker free to IEEE 1789-2015 available with EldoLED and TruPhase™ selections
- Universal 120-277v

© 2026 Specialty Lighting Industries

Specialty Lighting Industries
1306 Doris Ave., Ocean, NJ 07712
Tel. 732.517.0800 | Fax 732.517.0971

Ordering Codes

PROJECT:

SPECIFIER:

DATE:

TYPE:

QUANTITY:

Ordering Code Example: SCW3WW-S-F-BP-A14-AD-E2-A32

FIXTURE	TRIM	MOUNTING	LUMENS / WATTS	CCT	DRIVER / CONTROL	TRIM FINISH	ACCESSORIES
SCW3WW-S							
Scope Wonder 3" Wall Wash - Square	F Flanged Trim Z Flangeless Trim	NP New Pan (IC rated) for Mounting to bottom studs^ BP Bracket Pan (IC Rated) for mounting with hanger bars to studs or T-bar^ AT ● ● Airtight Housing* PM Panel Mount§ RM Remodel mounts direct to ceiling with clamps ● ● Supports CA Title 24 compliance to JA8 requirements * Chicago Plenum available with AT ^ Not Airtight, Not for use with spary foam § Must be used with flangeless trims.	**Citizen** C14 ● ● 15W 642Lm* 90+CRI, 60+R9 C20 21W 934Lm* 90+CRI, 60+R9 **Tunable** T7 ● ● 7W 90+CRI, *Tunable White* T20 ● ● 21W 90+CRI, *Tunable White* **Ambient Dim™** A14 15W 469Lm* 95+CRI, 90+R9 A20 ● ● 20 95+CRI, ● ● Supports CA Title 24 compliance to JA8 requirements ^1840cct is not Title 24 compliant *based on 2765cct +LTT or EldoLED driver selection required and will be supplied with 2 Channel version View Photometry	24 2400K 27 2700K 30 3000K 35 3500K 40 4000K **Tunable** TW1840 1800-4000K Tunable White *w/ E1, E2, E3, E4* TW2765 2700-6500K Tunable White *w/ E1, E2, E3, E4* **Ambient Dim™** 2722 * 2700-2200K **A14 Only* 3019 3000-1900K 3022* 3000-2200K **A14 Only*	C1 0-10 1.0%, UNV (120-277V) linear C2 ELV/Triac 1.0%, (120V) linear E1 0-10* 0.1%, UNV (120-277V) log E2 DALI-2* 0.1%, UNV (120-277V) log E3 0-10* 0.1%, UNV (120-277V) linear TR2 TruPhase™ 0.1%, (120-120V) log Up to 20W Forward and Reverse compatible Phase Dimming Static White & Ambient Dim only LD Digital Ecosystem* 1.0%, UNV (120-277V) ECO Hi-Lume SoftOn/Fade-to-Black LDE1 * Requires remote mounting	W White Paint A01 Black Anodize A32 Clear Aluminum Anodize AXX Specialty anodize color* A1-A36 PXX Specialty Paint Color* P01-P15 C Custom/RAL Color* K Blank for use with Flangeless or Panel Mount *See Finish Guide FINISH GUIDE LINK	CP Chicago Plenum EM Emergency Pack CA Casambi Wireless BLE to be paired with driver **Controls** LR Lutron Wireless RF PowPak ATH Lutron Athena Wireless Node *Must be used with E2 driver (DALI-2)*

© 2026 Specialty Lighting Industries

NOTE: Last Updated on Wed, Oct 21, 2026 4:40 PM.
These specifications are subject to change without notice.

Specialty Lighting Industries
1306 Doris Ave., Ocean, NJ 07712
Tel. 732.517.0800 | Fax 732.517.0971

Fixture Details

Receiver with integral trim attachment flange mounts pan or housing with ceiling clamps. Body assembly attaches to receiver with ball plungers.

Square Construction

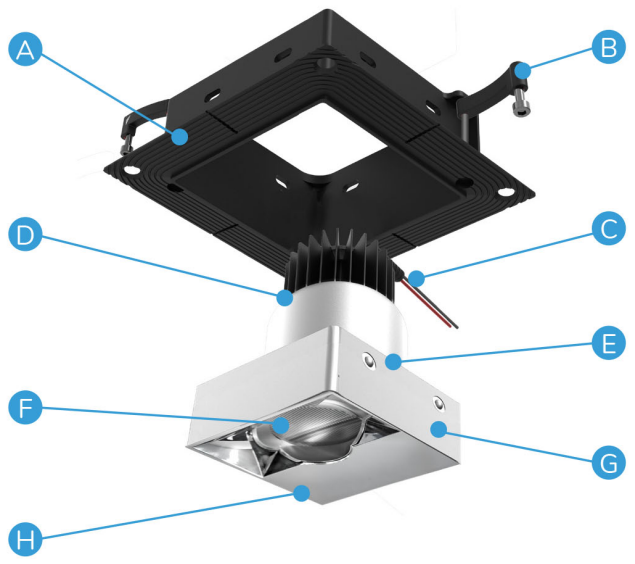

Flangeless shown

Square Assembly Specs

- A Receiver – High Grade Aluminum precision machined in U.S.A. with integral mud flange
- B Ceiling Clamp- Inserts into ceiling and automatically spreads during installation
- C 22AWG wire to Driver. Enclosed in flexible conduit connected to driver enclosure.
- D Thermal management system and body. High grade anodized aluminum, precision machined in the U.S.A.
- E LED Assembly- Field serviceable as part of thermal management system (not shown)
- F Relector optic- Field changeable
- G Bezel holder- Precision machined in the U.S.A. with ball stud attachment feature for solid locking and field service
- H Wall Wash optic- Molded polycarbonate metalized
- I Integral driver and enclosure – UL approved for IC-serviceable from below he ceiling
- J Finish Trim Flange magnetically attached (flange option)
- K Receiver and mounting bracket for Panel Trim/ millwork wood ceiling

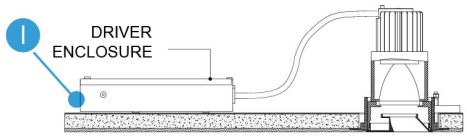

Flanged Trim Option

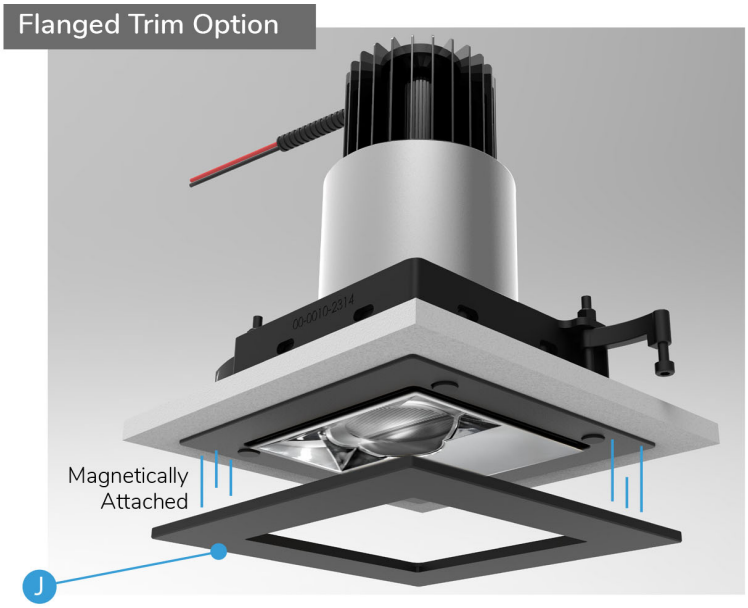

Flanged Finish Options

White P14 | A01 Black Anodize | A32 Clear Anodize

Anodized AXX | Powder Coat PXX | Custom C

Panel Trim Option

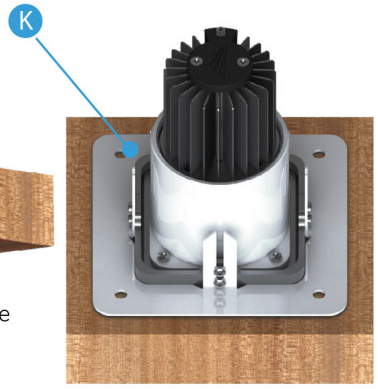

Panel Trim Mounting bracket must be attached to ceiling panel prior to ceiling installation

© 2026 Specialty Lighting Industries

NOTE: Last Updated on Wed, Oct 21, 2026 4:40 PM.
These specifications are subject to change without notice.

Specialty Lighting Industries
1306 Doris Ave., Ocean, NJ 07712
Tel. 732.517.0800 | Fax 732.517.0971

Ceiling Cutouts and Dimensions

Square New or Bracket Pan | FlangelessTrim (Z)

(SCW3WW-S-Z-BP / NP-)

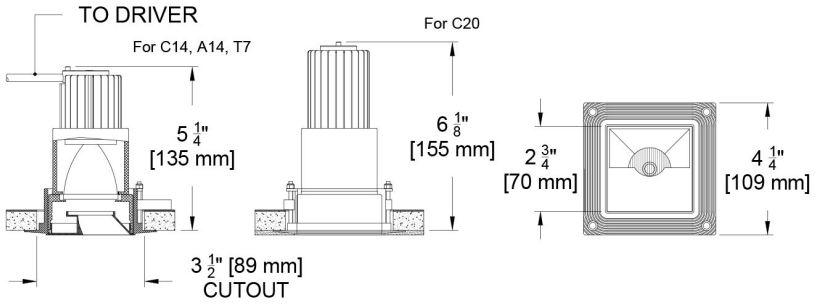

Square New or Bracket Pan | Flanged Trim (F)

(SCW3WW-S-F-BP / NP-)

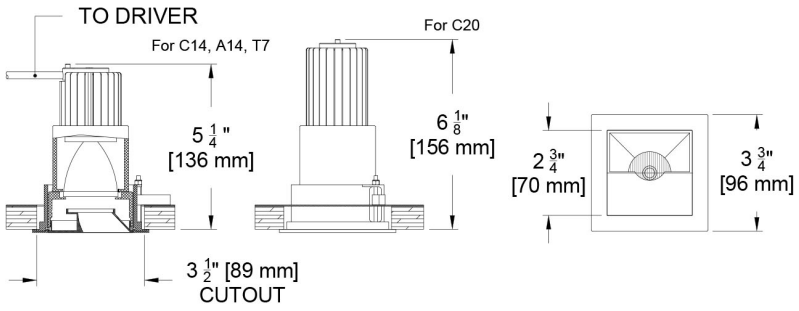

Square Panel Mount

(SCW3WW-S-F-PM-)

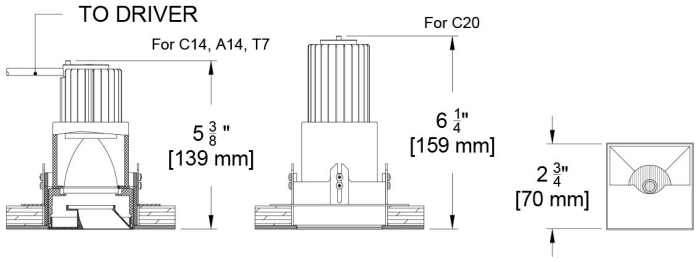

Panel Mount Detail (SCW3WW-S-Z-PM-)

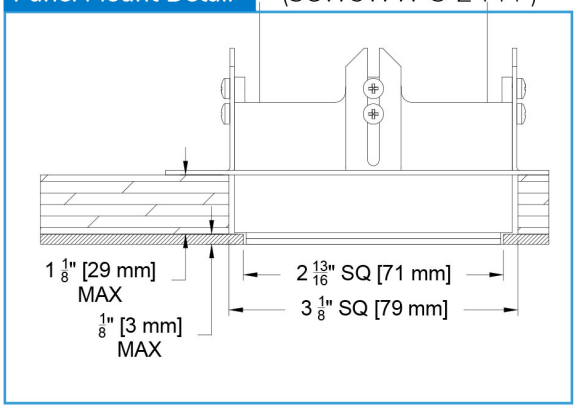

© 2026 Specialty Lighting Industries
NOTE: Last Updated on Wed, Oct 21, 2026 4:40 PM.
These specifications are subject to change without notice.
Specialty Lighting Industries
1306 Doris Ave., Ocean, NJ 07712
Tel. 732.517.0800 | Fax 732.517.0971

Ceiling Cutouts and Dimensions

Square Remodel — FlangelessTrim (Z)

(SCW3WW-S-Z-RM-)

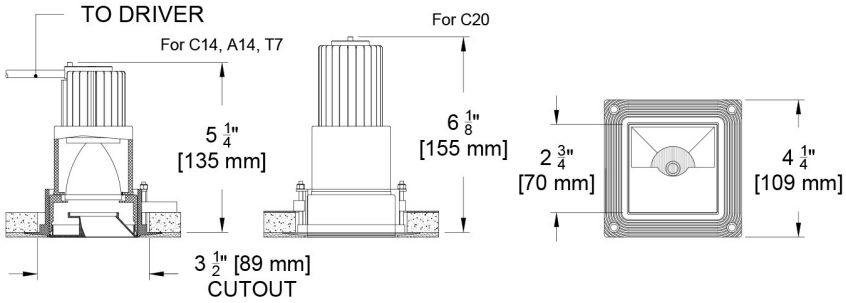

Driver Enclosure — for C1, C2, TR2

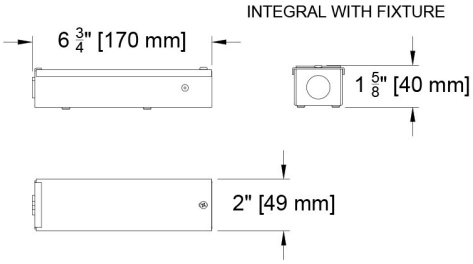

Driver Enclosure — for E1, E2, E3, E4, LD

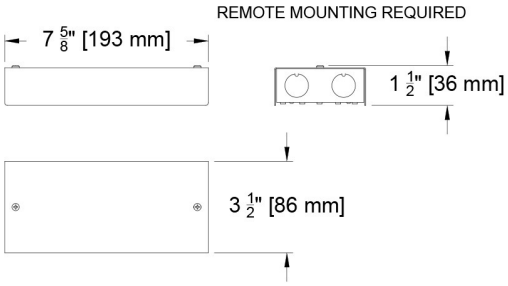

Square Remodel — Flanged Trim (F)

(SCW3WW-S-F-RM-)

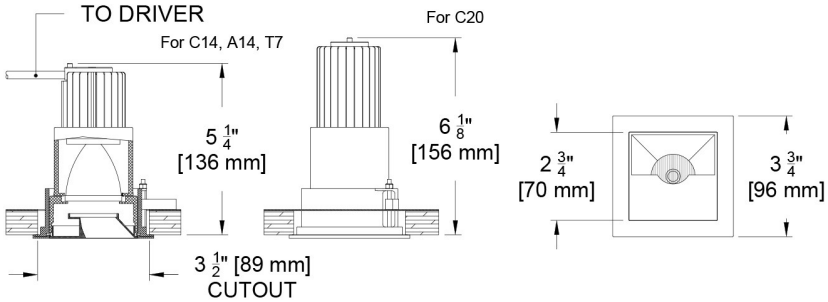

Square Airtight (AT)

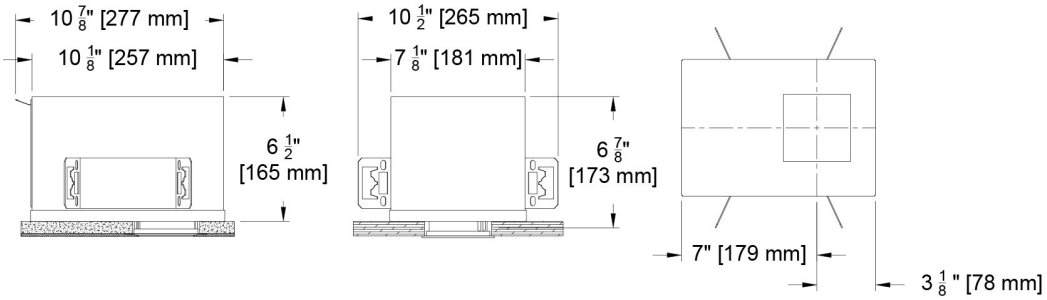

© 2026 Specialty Lighting Industries
NOTE: Last Updated on Wed, Oct 21, 2026 4:40 PM.
These specifications are subject to change without notice.
Specialty Lighting Industries
1306 Doris Ave., Ocean, NJ 07712
Tel. 732.517.0800 | Fax 732.517.0971

Mounting Options

New Pan (SCW3WW-S-_-NP)

For new construction and attachment to bottom of studs

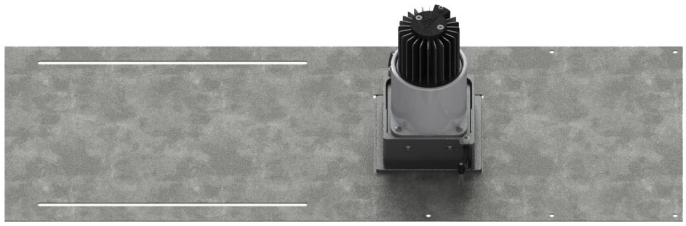

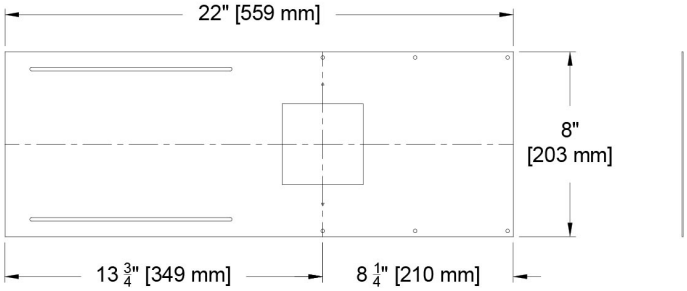

Bracket Pan (SCW3WW-S-_-BP)

For new construction using hanger bars for attaching to studs or drop ceiling

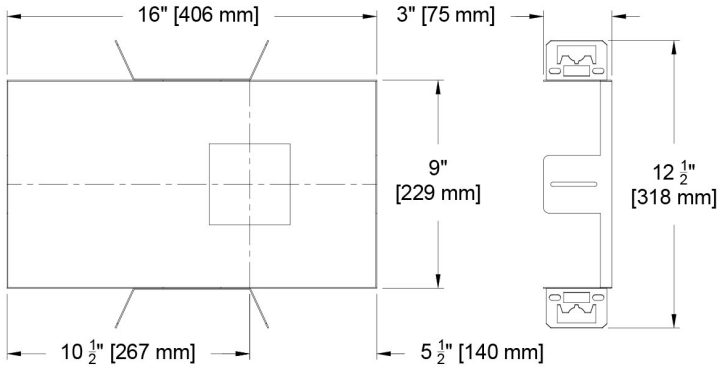

Option 1- Attaching to Studs

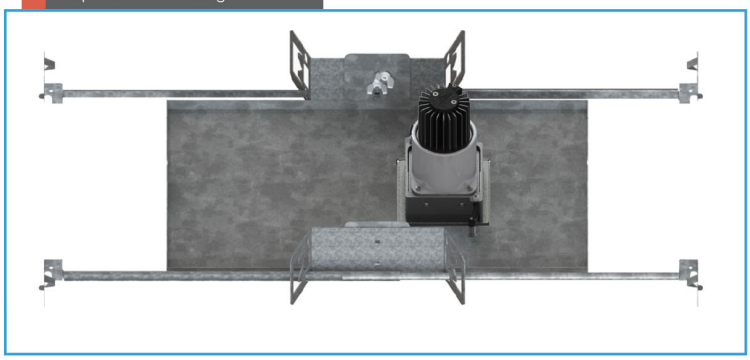

Option 2- Attaching to Drop Ceiling

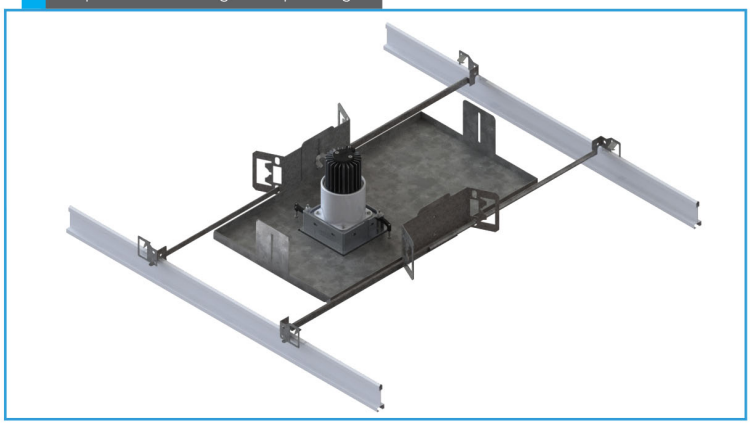

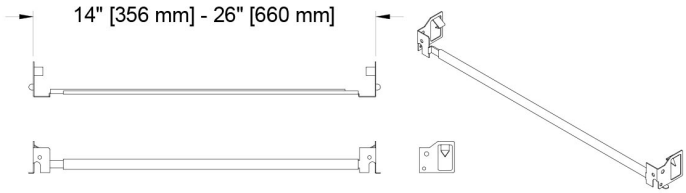

Note: For panel trim mounting see page 3 for picture of detail or refer to installation instructions

© 2026 Specialty Lighting Industries

Specialty Lighting Industries
1306 Doris Ave., Ocean, NJ 07712
Tel. 732.517.0800 | Fax 732.517.0971

Photometric Table

All data below are delivered lumens based on goniometer measurements of production representative product. All lumen values can vary +/- 10% from LED manufacturer rated flux range.

SQUARE Wall Wash				
Source	System watts (W)	Delivered Lumens (lm)	Lumens/ Watt	Peak cd
Citizen C14	14	642	46	1051
Citizen C20	21	934	44	1548
Ambient Dim A14	15	469	32	769
Tunable White 1840	10	329	32	532
Tunable White 2765	10	435	43	677

CCT Multiplier	
CCT	Citizen
2700	0.95
3000	1.00
3500	1.02
4000	1.03

All Measurements 3000K unless otherwise noted below. Ambient dim measured at full output. Tunable White measurements at mid-point CCT of range (2700k for 1840 and 4500k for 2765). C14 is only source meeting CA Title 24 JA8 efficacy requirements.

Beam angle

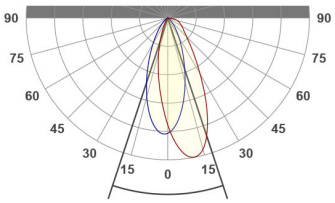

36.6°

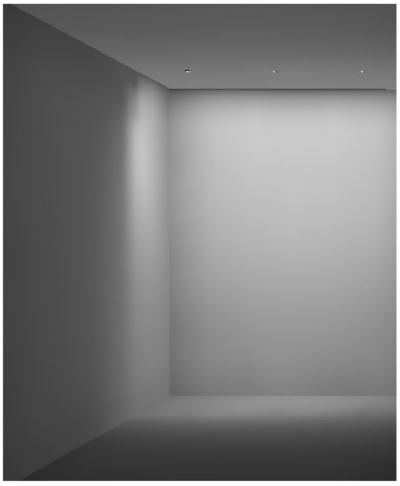

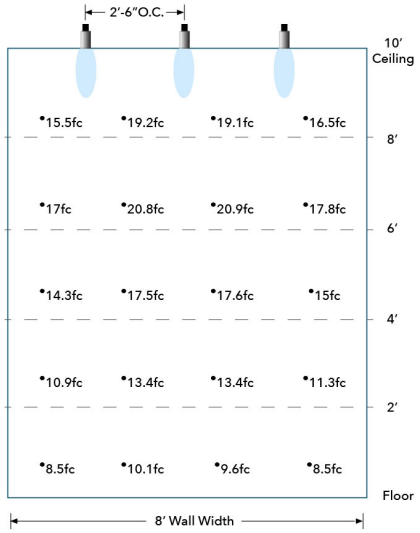

AGI Simulation of 3 Wall Wash fixtures in 8' square room at 10' ceiling height with 2.5' set back and (1:1) 2.5' on center spacing. 14W (650lm) fixture simulated

© 2026 Specialty Lighting Industries

NOTE: Last Updated on Wed, Oct 21, 2026 4:40 PM.
These specifications are subject to change without notice.

Specialty Lighting Industries
1306 Doris Ave., Ocean, NJ 07712
Tel. 732.517.0800 | Fax 732.517.0971

Color Data

All data below are delivered lumens. Color and flux information based on goniometer measurements of production representative product. All values can vary +/- 10% from LED manufacturer rated data range as listed on their datasheet.

Citizen - C14 and C20

- <2 MacAdam Ellipse (<2 SDCM)
- 90+ CRI and RF
- 60+R9, Hue Bin 1

94 CRI | 70 R9 | 91 RF | 100 RG

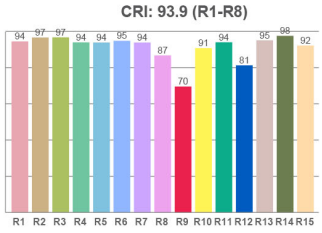

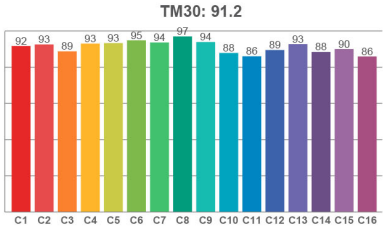

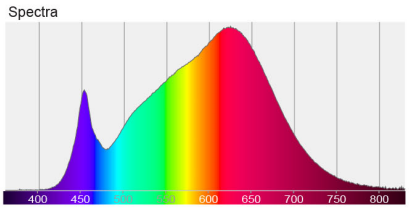

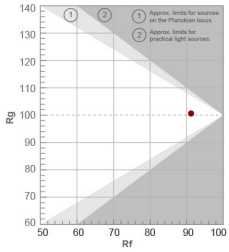

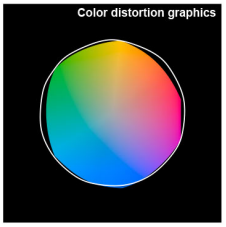

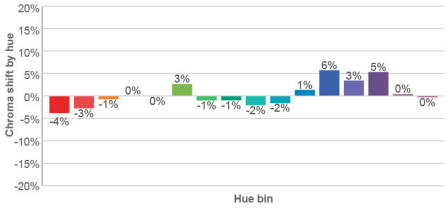

Ambient Dim - 3000k to 1900k

- <3 MacAdam Ellipse (<3 SDCM)
- 95+ CRI and RF
- 90+R9, Hue Bin 1
- Follows Black Body Locus through dimming range

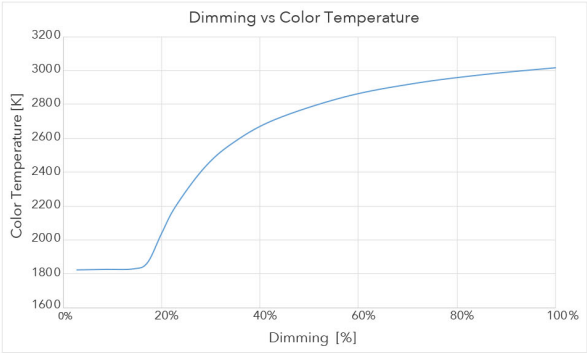

3000 CCT Full Output

97 CRI | 98 R9 | 95 RF | 104 RG

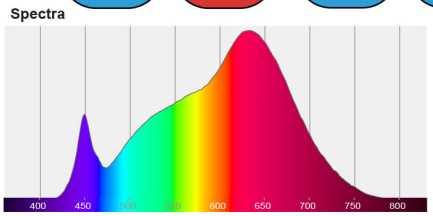

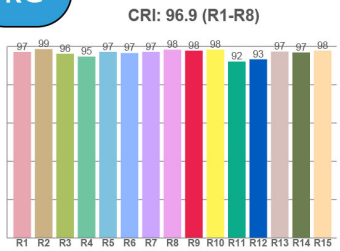

1850 CCT 5% Output

93 CRI | 72 R9 | 83 RF | 110 RG

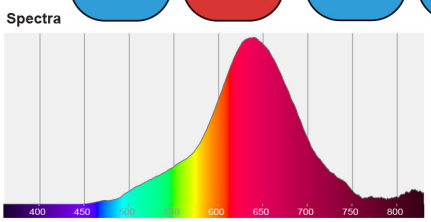

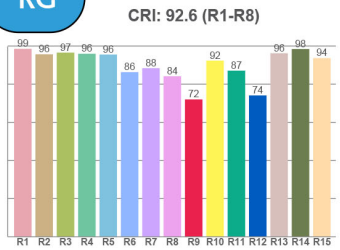

© 2026 Specialty Lighting Industries
NOTE: Last Updated on Wed, Oct 21, 2026 4:40 PM.
These specifications are subject to change without notice.
Specialty Lighting Industries
1306 Doris Ave., Ocean, NJ 07712
Tel. 732.517.0800 | Fax 732.517.0971

Tunable White 1800k to 4000k

- <3 MacAdam Ellipse (<3 SDCM)
- 94 CRI average across all CCTs
- 76 R9 average across all CCTs
- Available with wired or wireless control

INK	TUNABLE WHITE - 1800-4000K						
Color Temp	1800	2200	2500	2700	3000	3500	4000
System Watts	10	10	10	10	10	10	10
Delivered Lumens	254	290	314	329	361	382	382
Luminaire Efficiency	25	29	31	33	36	38	38
Flux and Color data based on measurement at 2700k. All other values are extroplated from actual and analytical tests							

Spectral Power Distributions at all listed CCTs available upon request

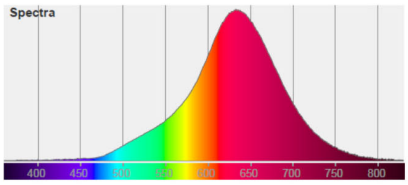

1800K

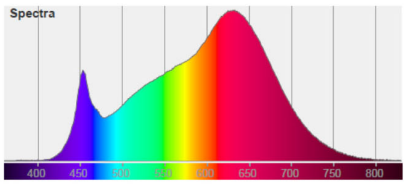

3000K

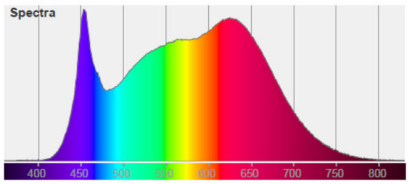

4000K

94 CRI | 76 R9 | 89 RF | 97 RG

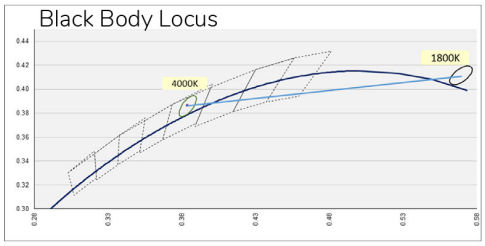

Tunable White 2700k to 6500k

- <3 MacAdam Ellipse (<3 SDCM)
- 94 CRI average across all CCTs
- 96 R9 average across all CCTs
- Available with wired or wireless control

INK	TUNABLE WHITE - 2700-6500K								
Color Temp	2700	3000	3500	4000	4500	5000	5500	6000	6500
System Watts	10	10	10	10	10	10	10	10	10
Delivered Lumens	409	422	435	436	435	434	434	432	438
Luminaire Efficiency	41	42	44	44	44	43	43	43	44
Flux and Color data based on measurement at 4500k. All other values are extroplated from actual and analytical tests									

Spectral Power Distributions at all listed CCTs available upon request

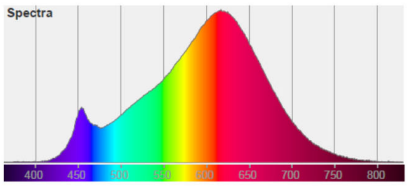

2700K

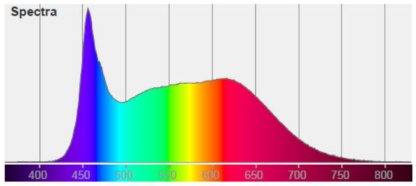

5000K

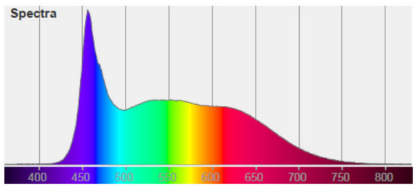

6500K

96 CRI | 96 R9 | 91 RF | 99 RG

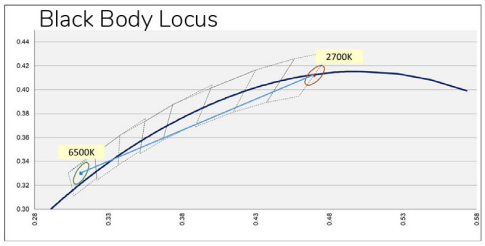

© 2026 Specialty Lighting Industries

NOTE: Last Updated on Wed, Oct 21, 2026 4:40 PM.
These specifications are subject to change without notice.

Specialty Lighting Industries
1306 Doris Ave., Ocean, NJ 07712
Tel. 732.517.0800 | Fax 732.517.0971